For the operator

Operating instructions

turboMAG pro

Gas-fired instantaneous water heater

MAG HK 13-2/0-3 H (back flue)
MAG HK 13-2/0-3 B (back flue)
MAG HK 17-2/0-3 H (back flue)
MAG HK 17-2/0-3 B (back flue)
MAG HK 13-2/0-3 H (top flue)
MAG HK 13-2/0-3 B (top flue)

HKen

Publisher/manufacturer
Vaillant GmbH
Berghauser Str. 40 ▮ D-42859 Remscheid
Telefon 021 91 18-0 ▮ Telefax 021 91 18-28 10
info@vaillant.de ▮ www.vaillant.de

Vaillant

Contents

1 Safety

1.1 Action-related warnings

Classification of action-related warnings

The action-related warnings are classified in accordance with the severity of the possible danger using the following warning signs and signal words:

Warning symbols and signal words

Danger!
Imminent danger to life or risk of severe personal injury

Danger!
Risk of death from electric shock

Warning.
Risk of minor personal injury

Caution.
Risk of material or environmental damage

1.2 Required personnel qualifications

Caution.

This product must only be used after the flue pipe that is routed to the outside has been installed.

According to the Hong Kong Gas Safety Regulations, Cap.51, any gas installation works including the installation of appliances and connecting tubing, must be undertaken by Registered Gas Installers who are registered for that appropriate classes and be employed by Registered Gas Contractors.

Improper work carried out on the product may cause material damage to the complete installation and, as a consequence, may even cause personal injury.

Note
In these instructions, the Registered Gas Installer is referred to throughout as "competent person".

- ► You should therefore only work on the product if you are an authorised competent person.

1.3 General safety information

1.3.1 Intended use

There is a risk of injury or death to the user or others, or of damage to the product and other property in the event of improper use or use for which it is not intended.

The products are gas-fired instantaneous water heaters and, as such, are intended for hot water generation.

Intended use includes the following:

- observance of the operating instructions included for the product and any other system components
- compliance with all inspection and maintenance conditions listed in the instructions.

This product can be used by children over eight years old and also by persons with limited physical, sensory or mental capabilities or insufficient experience and/or knowledge if they are supervised or have been provided with instructions on how to safely use the product, and they understand the risks resulting from using the product. Children must not play with the product. Cleaning and user maintenance work must not be carried out by children unless they are supervised.

Any other use that is not specified in these instructions, or use beyond that specified in this document shall be considered improper use. Any direct commercial or industrial use is also deemed to be improper.

Caution.

Improper use of any kind is prohibited.

1.3.2 Installation by competent persons only

Only an approved competent person is permitted to carry out installation, inspection, maintenance and repair work on the product.

1.3.3 Danger caused by improper operation

Improper operation may present a danger to you and others, and cause material damage.

- ► Carefully read the enclosed instructions and all other applicable documents, particularly the "Safety" section and the warnings.

1.3.4 Risk of death due to blocked or leaking flue gas routes

What to do if you smell flue gas in the property:

- Open all accessible doors and windows fully to provide ventilation.
- Switch off the product.
- Inform a Registered Gas Contractor.

1.3.5 Risk of death from escaping gas

What to do if you smell gas in the building:

- Leave rooms that smell of gas.
- If possible, open doors and windows fully and ensure adequate ventilation.
- Do not use naked flames (e.g. lighters, matches).
- Do not smoke.
- Do not use any electrical switches, mains plugs, doorbells, telephones or other communication systems in the building.
- Close the emergency control valve or the main isolator.
- If possible, close the gas isolator cock on the product.
- Warn other occupants in the building by yelling or banging on doors or walls.
- Leave the building immediately and ensure that others do not enter the building.
- Alert the police as soon as you are outside the building.
- Use a telephone outside the building to inform the emergency service department of the gas supply company.

1.3.6 Risk of death due to explosive and flammable materials

- Do not use or store explosive or flammable materials (e.g. petrol, paper, paint) in the installation room of the product.

1.3.7 Risk of death due to lack of safety devices

A lack of safety devices (e.g. expansion relief valve) may lead to potentially fatal scalding and other injuries, e.g. due to explosions.

- Ask a Registered Gas Installer to explain how the safety devices work and where they are located.

1.3.8 Risk of death due to changes to the product or the product environment

- Never remove, bridge or block the safety devices.
- Do not alter the safety devices in any way.
- Do not damage or remove any seals on components.
- Do not make any changes:
  - The product itself
  - to the gas, air, water and electricity supplies
  - to the entire flue gas installation
  - to the expansion relief valve
  - to the drain lines
  - to constructional conditions that may affect the operational reliability of the product

1.3.9 Risk of injury and material damage due to maintenance and repairs carried out incorrectly or not carried out at all

- Never attempt to carry out maintenance work or repairs on your product yourself.
- Faults and damage should be immediately rectified by a competent person.
- Adhere to the maintenance intervals specified.

1.3.10 Risk of damage from corrosion caused by an unsuitable installation site

Sprays , solvents , chlorinated cleaning agents , paint , adhesives , ammonia compounds , dust or similar substances may lead to corrosion on the product and in the flue pipe.

- Ensure that the installation site is always free of fluorine , chlorine , sulphur , dust , etc.
- Ensure that no chemical substances are stored at the installation site.

2 Notes on the documentation

2.1 Observing other applicable documents

► You must observe all operating instructions enclosed with the system components.

2.2 Storing documents

► Keep this manual and all other applicable documents safe for future use.

2.3 Applicability of the instructions

These instructions apply only to:

Product – Article numbers

MAG HK 13-2/0-3 H (back flue)	0010017391
MAG HK 17-2/0-3 H (back flue)	0010017392
MAG HK 13-2/0-3 B (back flue)	0010017393
MAG HK 17-2/0-3 B (back flue)	0010017394
MAG HK 13-2/0-3 B (top flue)	0010017395
MAG HK 13-2/0-3 H (top flue)	0010017396

3 Product description

3.1 Information on the identification plate

The identification plate is located on the side panel.

Information on the identification plate	Meaning
xxxxxxxyyyyyyyyyzzzzzzzzzzz	Bar code with serial number, 7th to 16th digit = product article number
Product Name	turboMAG pro
Model	MAG HK...
Type of Flue	Back-Flued Type or Top-Flued Type
Type of Gas	HK LP Gas or HK town gas
Operating Pressure (Gas)	Permissible gas pressure
Rated Heat Input	Power in kW
Hot Water Supply	Power in L/min , △T: 25℃
Water Pressure	0.14 - 10 bar
Electrical Supply	AC 220V/50Hz
Electrical Consumption	Electrical power in W
Manufactured By	Vaillant (Wuxi) Heating Equipment Co., Ltd
Type Approved By	CIQ Tianjin PRC
Type Approval Cert.No.	Number of the type approval certificate

Note
Make absolutely sure that the product is compatible with the gas group at the installation site.

3.2 Output ranges

Type designation	Power	Water flow rate (ΔT 25 K)
MAG HK 13-2/0-3 H (back flue) MAG HK 13-2/0-3 H (top flue) MAG HK 13-2/0-3 B (back flue) MAG HK 13-2/0-3 B (top flue)	Min. 4.8 - max. 28 kW	13 L/min
MAG HK 17-2/0-3 H (back flue) MAG HK 17-2/0-3 B (back flue)	Min. 6.2 - max. 37 kW	17 L/min

3.3 Product design

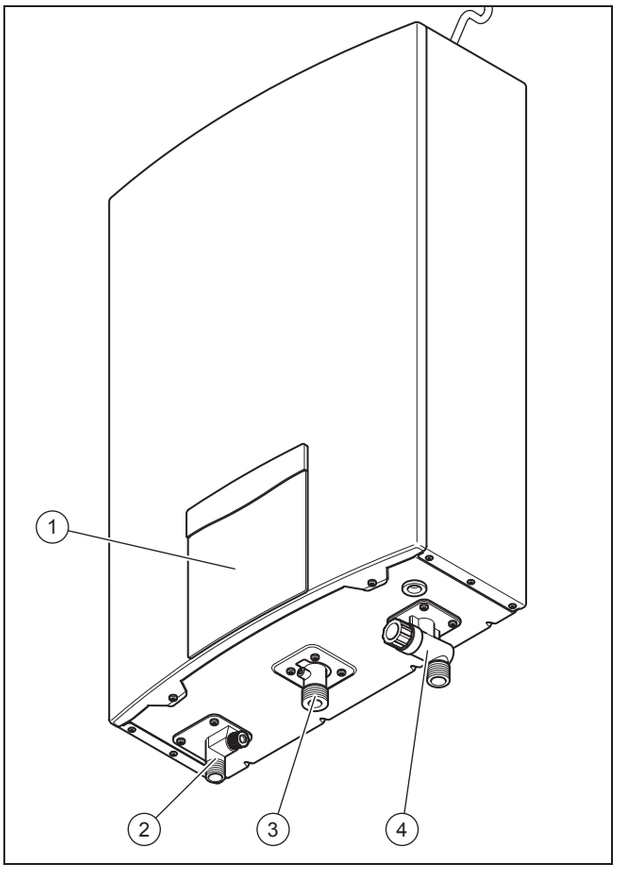

1	Display	3	Gas connection
2	Hot water connection	4	Cold water connection

3.4 Display operator control elements

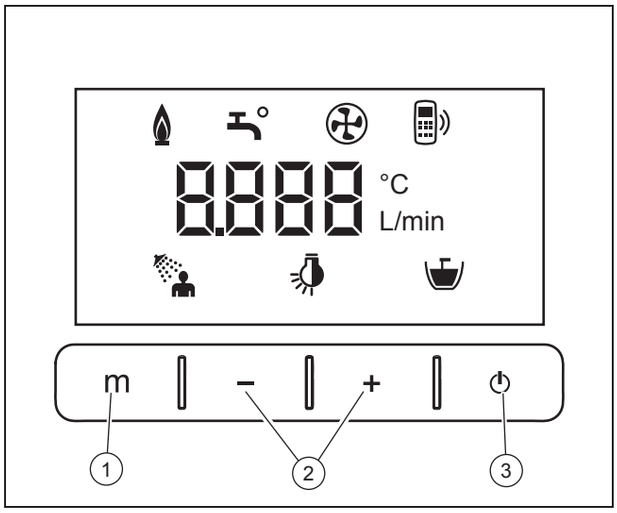

1 button for selecting the operating mode (press briefly) / button for selecting the priority of a remote control when there are several remote controls (press and hold)

2 and button

3 button (on/off button)

3.4.1 Displayed symbols

Symbol	Meaning	Explanation
	Burner operating correctly	Burner on
	Water generation active	Appears only when water is flowing through the product.
	Ventilator active	Appears when the ventilator is running.
L/min	Flow rate	Appears in the bath-filling mode.
	Bath-filling mode	Appears in the bath-filling mode.
	Normal operating mode	Appears in the normal operating mode
	Prioritisation of the remote controls	The prioritised remote control lights up on the display, or the non-prioritised remote controls flash on the display.
	ECO mode	Appears in ECO mode.

3.5 Control elements for further remote controls (optional)

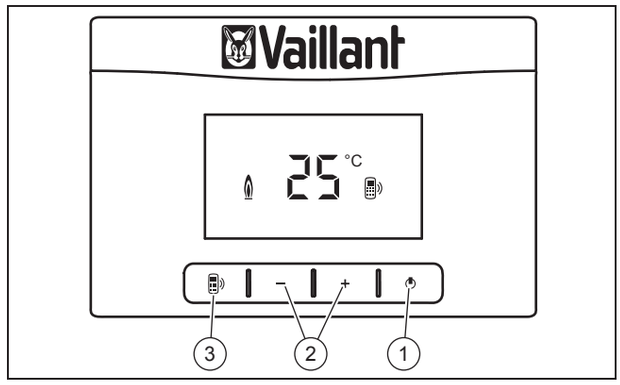

1 button (on/off button)

2 and button

3 Button for selecting the priority for a remote control

3.6 Recommended hot water temperature settings

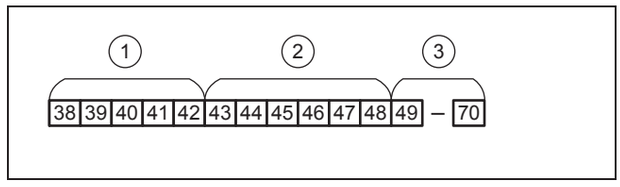

1 Washing dishes, showering

2 Showering, hot water

3 High temperature

The hot water temperature can be set from 38 °C to 70 °C (default setting: 42 °C). If the water temperature that is set is below 48 °C before hot water generation begins, you cannot increase the hot water temperature to above 48 °C during operation; this is to prevent scalding.

If the set water temperature was set to above 48 °C before hot water generation began , you can only reduce the temperature during operation; this is to avoid scalding.

If the product is disconnected from the power mains and started up again, the product reverts to the last hot water temperature that was set, up to a maximum of 48 °C.

If a hot water temperature of > 48 °C has been set and no hot water is drawn for 10 minutes , the hot water temperature is automatically set to 48 °C.

If several remote controls are used, the hot water temperature can only be set on the prioritised remote control.

3.6.1 Normal operating mode

The normal operating mode is used for hot water generation with adjustable temperature. The normal operating mode is activated after start-up.

3.6.2 ECO mode

ECO mode generates hot water at the temperature set beforehand and the water flow set beforehand.

Conditions : 13 L products

The water flow can assume various values: 6, 7, 8, 9, 10 L/min.

Conditions : 17 L products

The water flow can assume various values: 6, 7, 8, 9, 10, 11, 12, 13, 14 L/min.

The value that was last set for the water flow is saved and reapplied when ECO mode is activated.

3.6.3 Bath-filling mode

In bath-filling mode, you can specify the water volume that you require (e.g. 160 L).

You can only select the bath-filling mode on the main remote control for the product.

Note
When the water volume is 10 L below the set water volume, an audible signal sounds. The display shows the current water volume. Once the set water volume is reached , an audible signal sounds rapidly , to notify user to close the water tap . If the water tap is not closed, the display shows the current water volume.

The product sounds an audible signal if the bath has not yet been filled after 42 minutes.

4 Operation

Warning.
Risk of being scalded by hot water.

Incorrectly set water temperatures and hot water in the lines can lead to scalding.

► Check the water temperature with your hand.

4.1 Preparing for start-up

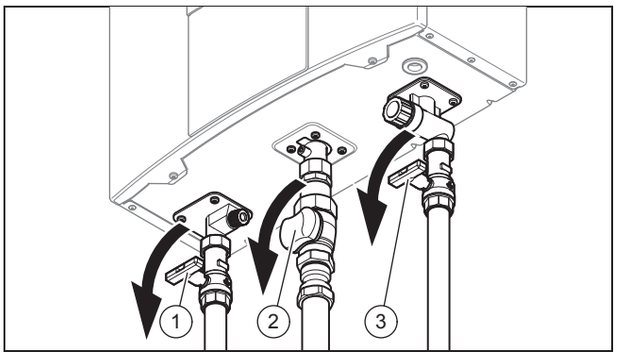

1. Open the cold water stop valve (3).
2. Open the hot water stop valve (1).
3. Open the water tap to check the water flow.
4. Close the water tap.
5. Switch on the power supply to the product.
6. Open the gas isolator cock (2).

4.2 Starting up the product

► Only start up the product once the casing has been completely closed.

4.3 Switching on the product

1. Press ⏻.
   ◁ The display shows the preset temperature in the normal operating mode (default setting: 42 °C). Once the self-test is complete , the display goes off and the product goes into standby mode.
2. Open the water tap.
   ◁ The product starts up automatically. If ignition problems occur, open and close the water tap several times (Please ensure there is a momentary pause in between each water tap opening and closing) .

4.4 Selecting operating modes

► Press m to choose between normal operating mode, ECO mode and bath-filling mode.

◁ The backlighting lights up.

Note
You can only change the operating mode when there is no existing hot water request.

4.5 Setting the normal operating mode

1. Press m.
2. Press ⊖ or ⊕ in order to set the water temperature.
   ◁ The display shows the set temperature for three seconds.
3. Open the water tap.
   ◁ The display shows the current water temperature.

4.6 Setting ECO mode

1. To switch from normal operating mode to ECO mode while in standby, press m once.
   ◁ The preset water flow flashes in the display.
2. Press ⊖ or ⊕ to select one of the values for the water flow.
3. Wait 3 seconds without applying any settings.
   ◁ The current set water temperature flashes in the display.
4. Press ⊖ or ⊕ to set the water temperature.
5. Open the water tap.
   ◁ The display will show the current water temperature after 3 seconds.

4.7 Stopping ECO mode

1. Press ⓜ to select other mode during standby status ; or
2. Remote control get the priority (if applicable)

4.8 Setting the bath-filling mode

1. To switch from normal operating mode to bath-filling mode while in standby, press ⓜ twice.
   ◁ The water volume display flashes. (Factory setting: 160 L)
2. Press ⊖ or ⊕ to set the water volume. Then wait 3 seconds.
3. Press ⊖ or ⊕ to set the water temperature.
   ◁ Default setting: 42 °C
4. Open the water tap.
   ◁ The display shows the current water temperature.

Note
An audible signal sounds 10 L before the set water volume is reached and when the volume is reached.
The product does not end bath-filling mode automatically.

4.9 Exiting bath-filling mode

1. Close the water tap for 10 minutes; or
2. Press ⓜ to select other mode during standby status; or
3. Press ⏻ (on/off button); or
4. When the water volume is 10 L below the set water , close the water tap; or
5. Switch off the external on/off switch; or
6. Remote control get the priority (if applicable)

4.10 Setting the priority for the remote controls

1. Close all of the hot water valves.
2. On the product, press and hold the ⓜ button to prioritise the control elements on the product. Alternatively, on a remote control, briefly press the button to prioritise the remote control.
   – The symbol displaying the prioritisation lights up on the display.
   Displayed symbols (→ Page 6)

5 Detecting and rectifying faults

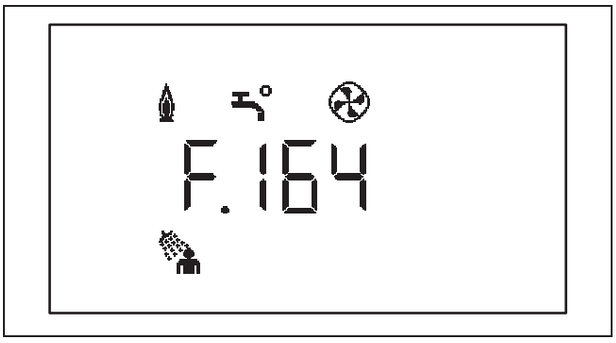

Fault messages have priority over all other displays.

► If faults occur or fault messages are displayed , proceed as set out in the table in the appendix.
Detecting and rectifying faults (→Page 10)

► If the product still does not function without problems after the checks have been carried out using the table , contact a competent person to rectify the problem.

6 Care and maintenance

6.1 Maintenance

An annual inspection and maintenance of the product every 18 months carried out by a competent person is a prerequisite for ensuring that the product is permanently ready and safe for operation, reliable, and has a long working life.

6.2 Caring for the product

Caution.
Risk of material damage caused by unsuitable cleaning agents.

► Do not use sprays , scouring agents , detergents, solvents or cleaning agents that contain chlorine.

► Clean the casing with a damp cloth and a little solvent-free soap.

7 Decommissioning

7.1 Temporarily decommissioning the product

► Close the cold water stop valve.
► Open the water tap to allow the rest of the water to flow out of the line.
► Close the water tap.
► Close the hot water stop valve.
► Close the gas isolator cock.
► Disconnect the product from the power mains.

7.2 Permanently decommissioning the product

► Have a competent person permanently decommission the product.

8 Guarantee and customer service

8.1 Guarantee

For information on the manufacturer's guarantee, you can write to the contact address that is provided on the back page.

8.2 Customer service

For contact details for our authorised customer service department, you can write to the address that is provided on the back page, or you can visit www.vaillant.com.

Appendix

A Detecting and rectifying faults

Problem	Possible cause	Solution
Ignition malfunction	Air in the gas line	Opening and closing the water tap several times (Please ensure there is a momentary pause in between each water tap opening and closing)
Automatic shutdown of the burner after 45± 3 minutes	Safety device has switched on	Closing the water tap for a short time
No hot water with slightly opened water tap	Flow rate is below 2.5 L/min	Increasing flow rate at the water tap
No hot water with water tap open	Remaining cold water in the line	Discharge the cold water
Vapour at the flue gas opening	The water in the flue gas condenses in the cold air	No fault
Hot water is white	Air that is dissolved in the cold water escapes	No fault
After closing the hot water valve, the ventilator continues running	Ventilator supplies the burner with outside air	No fault
Fluctuating water temperature and flow rate	Additional water taps are opened or closed	No fault
Water leak at the expansion relief valve	Expansion relief valve opens to reduce excess pressure	Limit the cold water pressure at the inlet to less than 1.0 MPa (10 bar) and more than 0.014 MPa (0.14 bar). Ask a competent person for details.
Whistling noise during operation	Uneven gas flow, low gas pressure	Inform the competent person/customer service department and have them check the gas pressure.

0020208984_00 ▮ 21.04.2015

Hotpool Industries Limited
Flat 7-12, 16/F ▮ Wing Hang Industrial Building ▮ 13-29 Kwai Hei Street ▮ Kwai Chung ▮ Hong Kong
Phone +852 3622 3833 ▮ Fax +852 3622 3820 ▮ company@hotpool.com.hk